www.kopecs.com

ISO 9001

KIPO

HI-PERFORMANCE

CONTROL VALVES

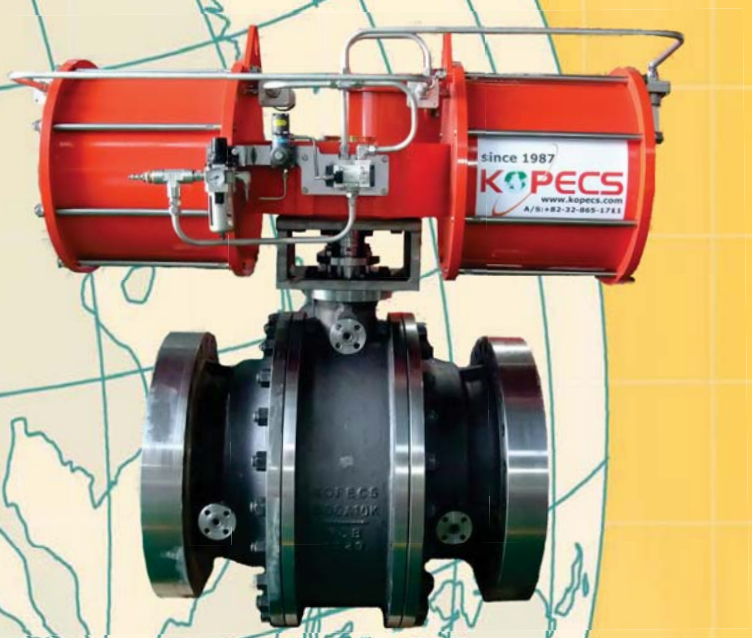

ORE SHUT-OFF VALVE KBV260 SERIES

KOPECS CO.,LTD. was founded with vision 'Serving the community, Sharing visions, Aiming high' on 1987

since 1987
KOPECS
CONTROL VALVES

ORE SHUT-OFF VALVE KBV260 SERIES

GENERAL INFORMATION

Application

Refining : Catalyst Slurry Handling, Heavy Oil Units
Iron & Steel (Ore, DRI, HCI), Hydrogen Isolation
Coal Slurry Handling/Ash Removal, Heavy Oil Units
Chemical / Petro Chemical : Acetic Acid Handling,
Catalyst Handling, Dowtherm Handling, Lethal Service
Gas Furnace Isolation, Polyethylene Isolation,
Polypropylene Isolation, Solids Handling

Applicable Standards

Body Material : Standard in WCB, CF8, CF8M, Special material is available according to requirements.
Nominal size : 2” to 100”(DN50 to DN2500)
Pressure rating : ANSI 150~2500Lb
End connections : RF, RTJ, BW
Temperature range for Soft Seat : -50?~180?
Temperature range for Metal Seat : -50?~500?
Face to Face Dimensions : ANSI B16.10
Flanged Dimensions : ANSI B16.5
Body Pressure Test Rating : ANSI B16.34 / API 598
Seat Leakage Soft Seat : ANSI B16.34 / API 598 CLASS VI
Seat Leakage Metal Seat : ANSI B16.104 / FCI70-2 CLASS V
Casting : MSS-SP-25 / MSS-SP-55
Fire Test : API 607 4th Edition
Sour Service for Oil Fields : Complies with NACE MR-01-75 standard

ORE SHUT-OFF VALVE KBV260 SERIES

STRUCTURE CHARACTERISTIC

* BALL

Standard

Incoloy /Alloy, High Special Metal – Metallizing
Option : Hastelloys , Titanium, Zirconium, Nickel

Features

Machined and lapped to as perfect a sphere as possible
Every ball and seat are "Blued " to assure that 100% contact is achieved across the entire seat face.
Coated to at least a hardness of 62RC

* SEAT

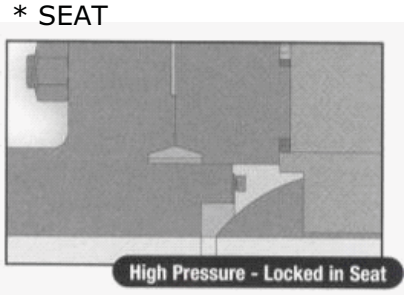

Features

Sharp leading edges of the seatring wipe the sealing surface clean each time the valve is operated.
A wide sealing surface on each seatring minimizes the possibility of nicks and scratches which cause leakage.

* STRUCTURE

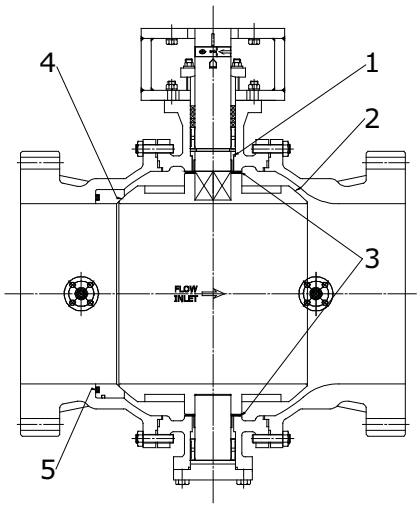

Features

1. DU-DRY BEARING : Increase operation ability with preventing sticking between Body and Stem.
2. Secure the flow to prevent fluid drift.
3. THRUST BEARING GUIDE : Increase operation ability of DISC.
4. Lapped Ball is maintained the airtightness with precision concentric .
5. Singular Seat is operated by low Torque and kept up between Disc and Spring.

ORE SHUT-OFF VALVE KBV260 SERIES

CONSTITUTION

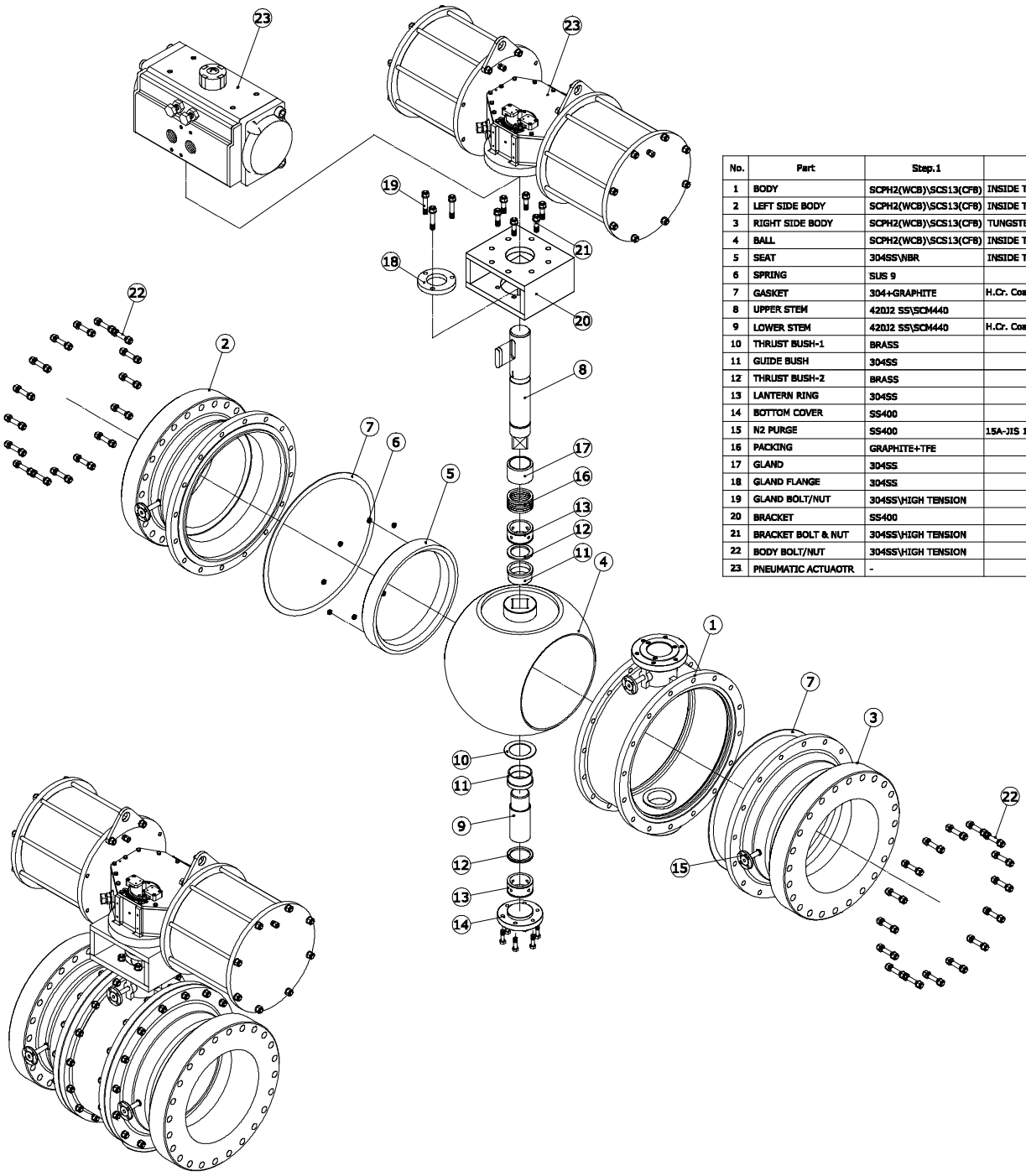

No.	Part	Step.1	Remark
1	BODY	SCPH2(WCB)\SCS13(CF8)	INSIDE TUNGSTEN COATING
2	LEFT SIDE BODY	SCPH2(WCB)\SCS13(CF8)	INSIDE TUNGSTEN COATING
3	RIGHT SIDE BODY	SCPH2(WCB)\SCS13(CF8)	TUNGSTEN COATING
4	BALL	SCPH2(WCB)\SCS13(CF8)	INSIDE TUNGSTEN COATING
5	SEAT	304SS\NBR	INSIDE TUNGSTEN COATING
6	SPRING	SUS 9	
7	GASKET	304+GRAPHITE	H.Cr. Coating
8	UPPER STEM	420J2 SS\SCM440	
9	LOWER STEM	420J2 SS\SCM440	H.Cr. Coating
10	THRUST BUSH-1	BRASS	
11	GUIDE BUSH	304SS	
12	THRUST BUSH-2	BRASS	
13	LANTERN RING	304SS	
14	BOTTOM COVER	SS400	
15	N2 PURGE	SS400	15A-JIS 10K RF FLANGE
16	PACKING	GRAPHITE+TFE	
17	GLAND	304SS	
18	GLAND FLANGE	304SS	
19	GLAND BOLT/NUT	304SS\HIGH TENSION	
20	BRACKET	SS400	
21	BRACKET BOLT & NUT	304SS\HIGH TENSION	
22	BODY BOLT/NUT	304SS\HIGH TENSION	
23	PNEUMATIC ACTUAOTR	-	

ORE SHUT-OFF VALVE KBV260 SERIES

DIMENSION

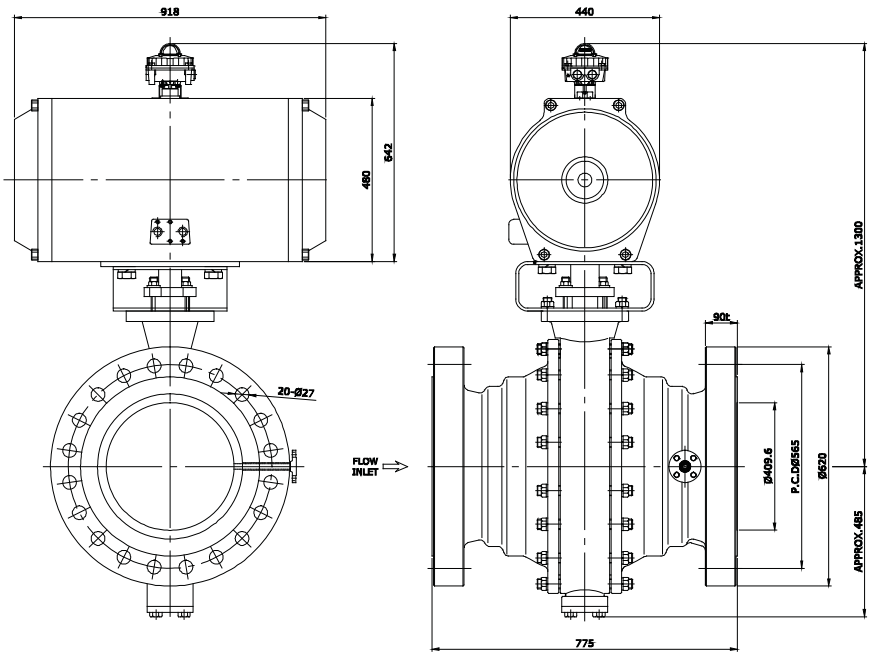

<400A DIMENSION>

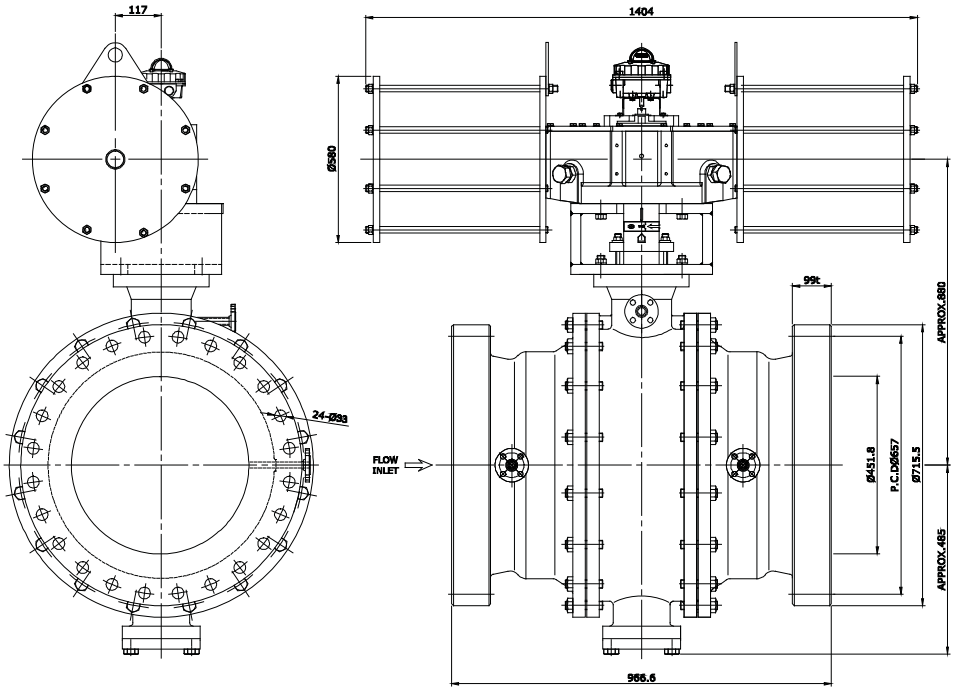

<500A DIMENSION>

ORE SHUT-OFF VALVE KBV260 SERIES

SCHEMATIC DIAGRAM

400A Schmatic Diagram

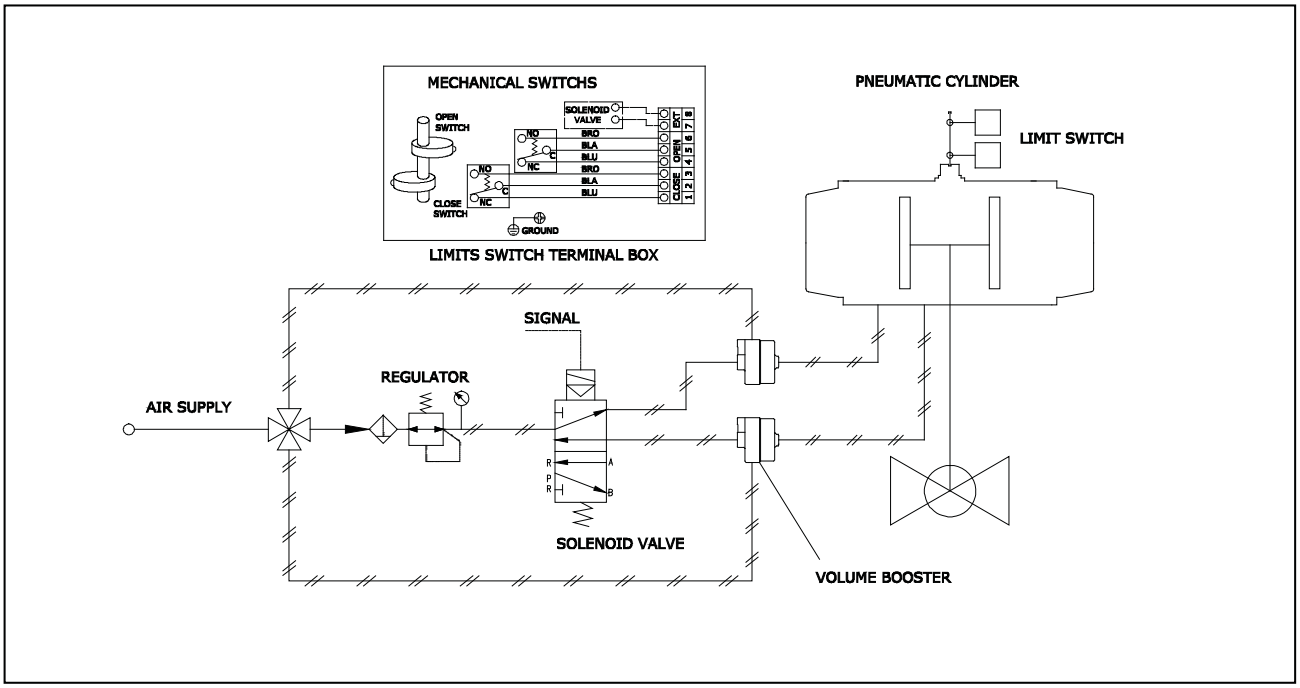

500A Schmatic Diagram

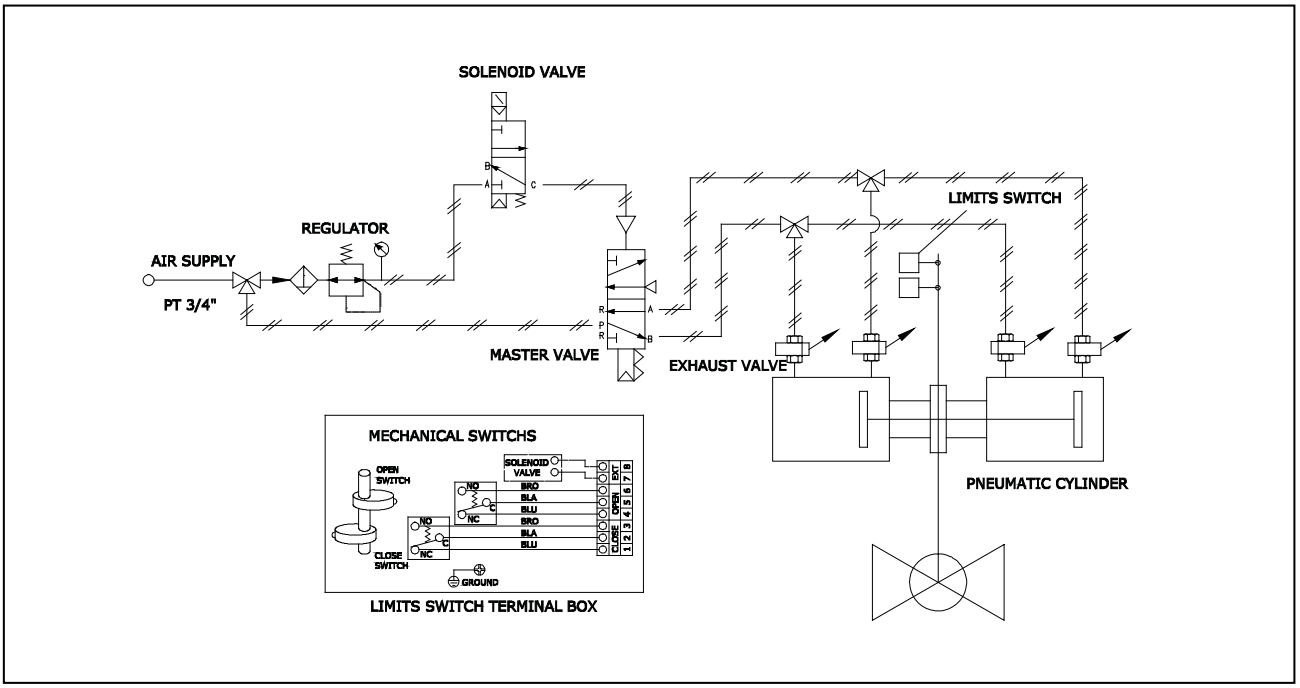

ORE SHUT-OFF VALVE KBV260 SERIES

TEST AND QUALITY SYSTEM

Full employee acceptance of quality is paramount to a successful Quality Assurance Program. KOPECS has established a culture of quality throughout the company, from the first customer inquiry to the product shipment.

ISO 9001:2000

Certificate No : RQM2888

Quality Management System Certificate

This is to certify that
the quality management system of

KOPECS CO.,LTD.

at

#822-12, Dohwa-dong, Nam-gu, Incheon, Korea

Has been found to conform to the Quality Management System Standards:

KS A 9001:2001 / ISO 9001:2000

This Certificate is valid for the following product or service ranges:

Design, Development, Manufacturing and Services of Control Valves, Special Valves, Manual Valves, Valve Actuator and Accessories

Issue Date
Jul. 24. 2006

Certification Date : Jul. 24. 2006 Valid Date : Jul. 23. 2009

Authorized By : K. H. Park
Ki Ho Park, President

KMA Registrations & Assessments Inc.

KAB

Material inspection : Following parts shall be verified to conform to the materials specified in the approved drawings by means of mill certificates.
Visual inspection : Surface condition of castings, roughness of the machined surface and marking (flow direction, material, name plate, etc.) shall be inspected.
Hydrostatic inspection : After filling the retaning parts with water, they are hydrostatically tested at the pressure specified in the approved drawing for according to ANSI 16.34.
Seat leakage test : After the function test, keep inlet pressure as specified in the approved drawing. And seat leakage from outlet side shall be visually checked.(According to FCI 70-2)
Pneumatic test : After assembling the cylinder valve for actuator, 0.9 MPa air or nitrogen gas pressure shall be applied to tube out side and soap water shall be applied to surface of the actuator & solenoid valve, tube, fitting
Function test : Install valve on the test apparatus, and inspect Solenoid valve, Limit switch operating test.

All of KOPECS products are designed, manufactured, tested with various standards based on customer's needs according to following;

ASME/ANSI	B 16.5, B 16.10, B 16.25, B 16.34, B 16.37,ASME section V., VIII. and IX.
API	SPEC Q1, SPEC 6A, SPEC 6D, SPEC 5L, SPEC 6FA, std. 607, std. 598
MSS	SP 6, SP 25, SP 53, SP 54, SP 72
BS	1560, 2080, 5146, 5351, 6755 part 2
ASTM	material specifications of materials used
ISO	EN 9001:2000, 5211m EN 10 204, NACE - MR-01-75
DIN	1690, 2505, 2544-48, 2526, 3203, 3230, 3840, material specifications of materials used

ORE SHUT-OFF VALVE KBV260 SERIES

VALVE NUMBERING SYSTEM

KBV	260	F	-	1	500	-	2	3	R	-	P	S	E	-	EASBL
BALL VALVE	1	2		3	4		5	6	7		8	9	10		11

1. VALVE STYLE		2. END CONNECTION		3. RATING				4. BODY SIZE(mm)					
200	METAL SEATED (SIDE ENTRY)	P	PT THREAD	5	KS(JIS) 5K	A	ANSI 125Lb	CODE	mm	CODE	mm	CODE	mm
210	3PIECE TRUNNION	R	RF FLANGED	1	KS(JIS) 10K	B	ANSI 150Lb	015	15	125	125	600	600
220	2PIECE TRUNNION	U	UNION	7	KS(JIS) 16K	D	ANSI 250Lb	020	20	150	150	700	700
230	3PIECE FLOATING	F	FF FLANGED	2	KS(JIS) 20K	E	ANSI 300Lb	025	25	200	200	750	750
240	2PIECE FLOATING	B	BUTT WELDING	3	KS(JIS) 30K	F	ANSI 400Lb	032	32	250	250	800	800
250	SPECIAL	C	TRY CLAMP	4	KS(JIS) 40K	H	ANSI 600Lb	040	40	300	300	900	900
260	3-PIECE ORE SHUT-OFF VALVE	S	SOCKET WELDING	6	KS(JIS) 63K	K	ANSI 900Lb	050	50	350	350	40B	1,000
		T	RING JOINT	N	DIN PN16	L	ANSI 1500Lb	065	65	400	400	**B	****
		N	NPT THREAD	P	DIN PN25	M	ANSI 2500Lb	080	80	450	450		
		L	LARGE GROOVE	Q	DIN PN40			080	80	450	450		
		M	MALE&FEMALE	R	DIN PN63			100	100	500	500		
		W	WAFER(BOLTED)	S	DIN PN100								

5. BODY MATERIAL		6. DISC MATERIAL		7. SEAT MATERIAL		8. ACTUATOR		11. ACCESSORIES	
1	CAST IRON (GC 200)	3	SSC 13 (SUS 304)	3	SUS 304+STELLITE	L	LEVER	N	NONE
2	CAST STEEL (SCPH 2)+T.C.C	4	SSC 14 (SUS 316)	4	SUS 316+STELLITE	G	GEAR BOX	A	AIR FILTER REGULATOR
3	SSC 13 (SUS 304)	5	SSC 19 (SUS 304L)	5	SSC 19 (SUS 304L)+STELLIT	B	BEAR STEM	E	E/P POSITIONER
4	SSC 14 (SUS 316)	6	SSC 16 (SUS 316L)	6	SSC 16 (SUS 316L)+STELLIT	P	PNEUMATIC CYLINDER	P	P/P POSITIONER
5	SSC 19 (SUS 304L)	7	HASTELLOY-C	7	HASTELLOY-C	M	ELECTRO MOTOR	S	SOLENOID VALVE
6	SSC 16 (SUS 316L)	8	TITANIUM	8	TITANIUM	H	HYDRO CYLINDER	L	LIMIT S/W
7	HASTELLOY-C	9	SSC 13 (SUS 304)+H.Cr	9	SUS 310S+NCM	9. FAIL POSITION		B	BOOSTER RELAY
8	TITANIUM	A	SSC 14 (SUS 316)+H.Cr	E	SDV 253MA+NCM	O	FAIL OPEN POSITION	U	LOCK-UP VALVE
9	SUS 310S	B	SUS 316+STELLITE	N	PFA	S	FAIL CLOSE POSITION	Q	QUICK EXHAUST V/V
		D	SCH21+H.Cr	P	PTFE	L	FAIL LAST POSITION	C	SPEED CONTROLLER
		E	SUS 310+NCM	R	R.TFE	10. FAIL POSITION		M	MANUAL HANDLE
		F	SDV 253MA+NCM	C	C.TFE	W	WATER PROOF	T	TRANSMITTER
		G	SUS 310+W.C.C	G	SUS 310+W.C.C	E	EXPLOSION PROOF(Ex...)	R	MASTER VALVE
		H	SDV 253MA+W.C.C	H	SDV 253MA+W.C.C	H	EXPLOSION PROOF(Ex...IIC(H_2))	F	POSITION TRANSMITTER

Product Group of KOPECS

Control Valves
Globe Valves
Desuperheater
Ball Valves
Butterfly Valves

Actuators
Diaphragm
Cylinder / Hydro
Electro-Hydraulic
Electronic Motor

Special Valves
Auto Cleannet Valves
- Slide Gate Valve
- Flap Valve

Hi-Temp Valve
Plug Valve

KOPECS CO.,LTD.

CONTROL VALVE MANUFACTURE

인천시 남구 도화동 822-12
822-12, Dohwa-dong,Nam-gu,Incheon,Korea
TEL : +82-32-865-1711 FAX : +82-32-865-1718
www.kopecs.com E-mail : kopecs@kopecs.com